WOODMART

DUURZAAM INVENTIEF

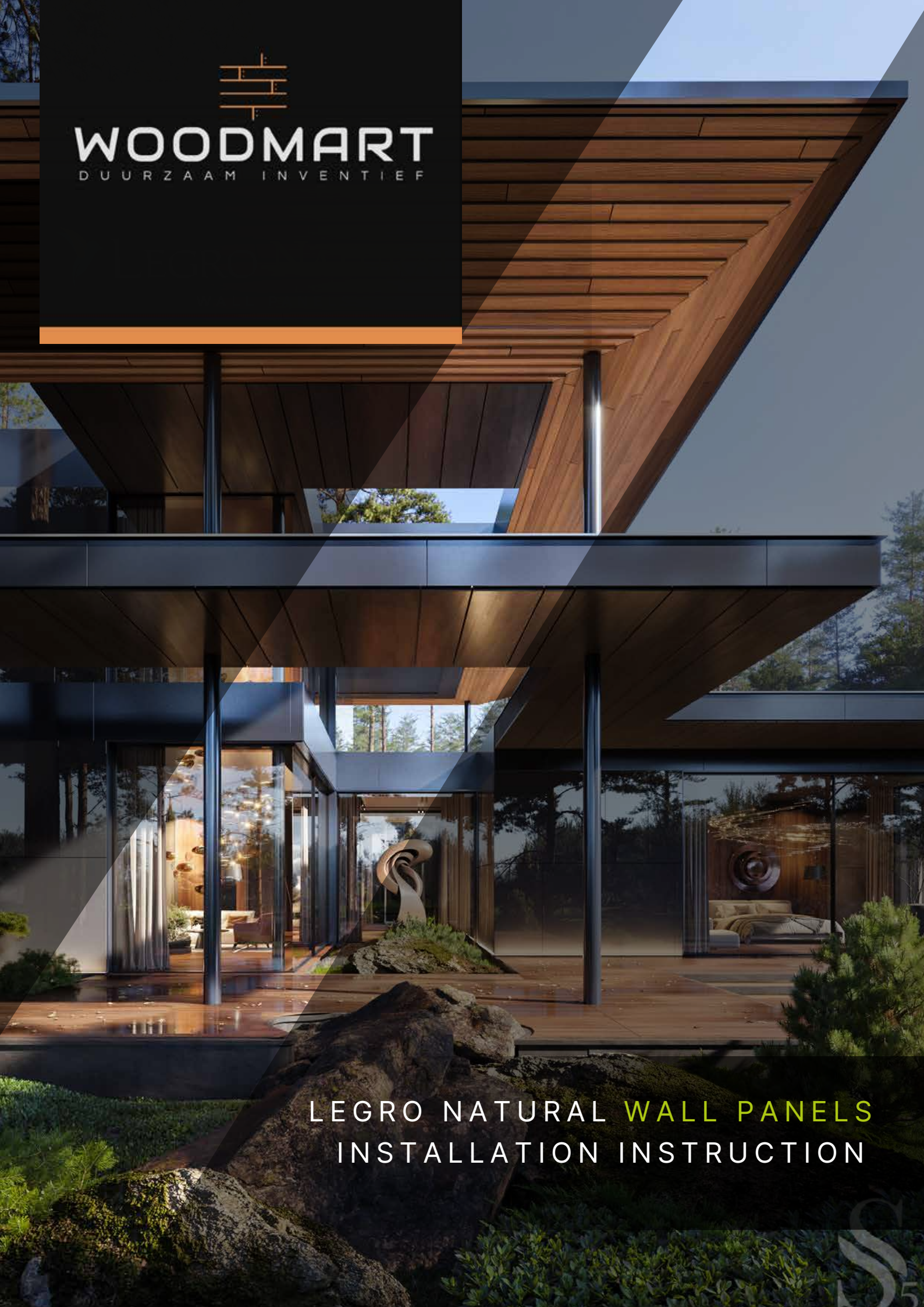

# LEGRO NATURAL WALL PANELS INSTALLATION INSTRUCTION

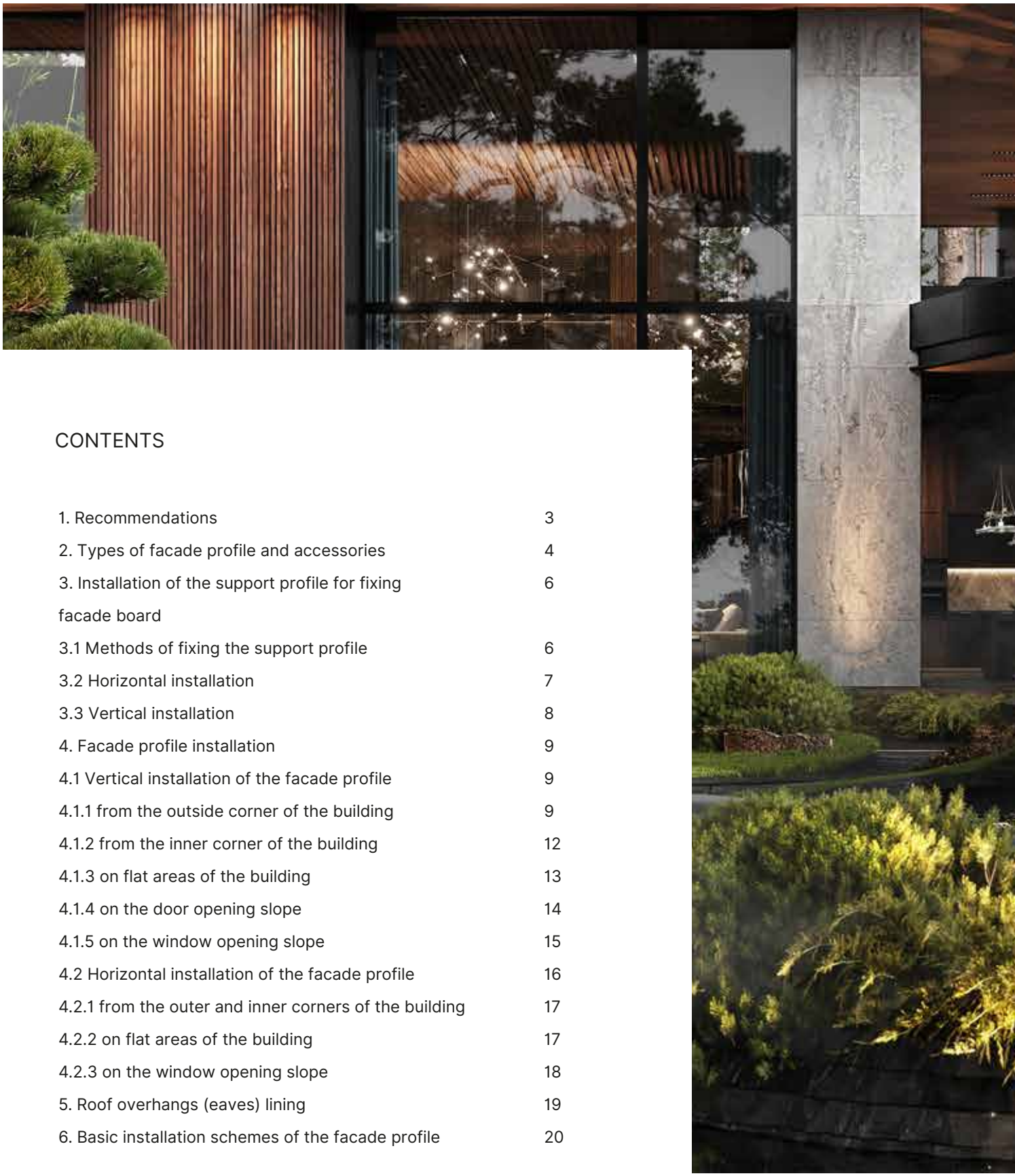

CONTENTS


| | |
|---|---|
| 1. Recommendations | 3 |
| 2. Types of facade profile and accessories | 4 |
| 3. Installation of the support profile for fixing facade board | 6 |
| 3.1 Methods of fixing the support profile | 6 |
| 3.2 Horizontal installation | 7 |
| 3.3 Vertical installation | 8 |
| 4. Facade profile installation | 9 |
| 4.1 Vertical installation of the facade profile | 9 |
| 4.1.1 from the outside corner of the building | 9 |
| 4.1.2 from the inner corner of the building | 12 |
| 4.1.3 on flat areas of the building | 13 |
| 4.1.4 on the door opening slope | 14 |
| 4.1.5 on the window opening slope | 15 |
| 4.2 Horizontal installation of the facade profile | 16 |
| 4.2.1 from the outer and inner corners of the building | 17 |
| 4.2.2 on flat areas of the building | 17 |
| 4.2.3 on the window opening slope | 18 |
| 5. Roof overhangs (eaves) lining | 19 |
| 6. Basic installation schemes of the facade profile | 20 |

## 1. RECOMMENDATIONS

- If you are planning to install a facade profile, it is important to follow the building regulations in your region. Before installing any composite facade system, we suggest that you check the local building regulations for any special requirements or restrictions. Additionally, it is recommended that you familiarize yourself with the European standards CEN/TS 15534-1, CEN/TS 15534-2, CEN/TS 15534-4, and CEN/TS 15534-5.

- When working with wood-polymer composite, it is possible to use standard woodworking tools.However, it is advisable to use blades and saw disks that have a carbide tip and the maximum number of teeth possible.

- To ensure the best appearance of the facade, it is recommended to create a project with plans and cuts of future structures before starting the installation. This will help avoid mistakes and ensure a flawless finish.

- It is important to note that all facade profiles should not be used as load-bearing structures.

- Additionally, the facade must not be mounted on an existing one.

- The recommended ambient temperature for installation is between +5 to +28 degrees Celsius.

## 2. TYPES OF FACADE PROFILES AND ACCESSORIES

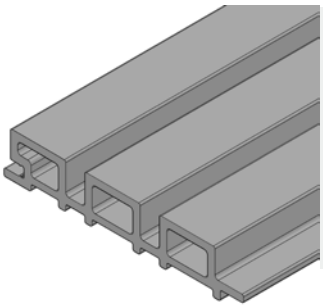

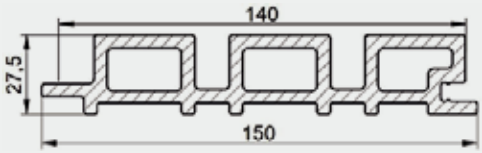


### Facade FS 15 profile

| | |
|---|---|
| Size | 27,5x150x3600 mm |
| Usable width: | 140 mm |
| Total width: | 150 mm |

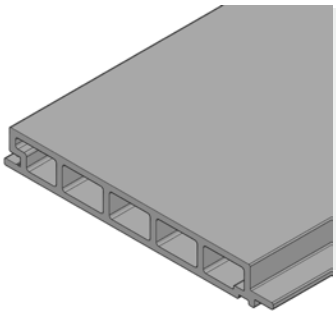

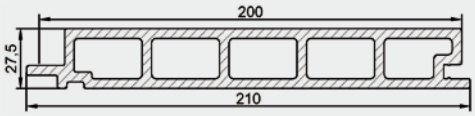


### Facade FS 21 profile

| | |
|---|---|
| Size | 27,5x150x3600 mm |
| Usable width: | 200 mm |
| Total width: | 210 mm |

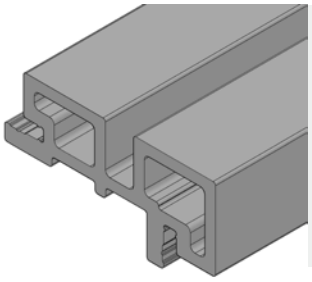

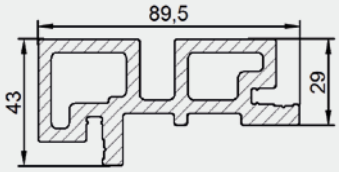


### Corner profile AC 20

| | |
|---|---|
| Size | 27,5x150x3600 mm |

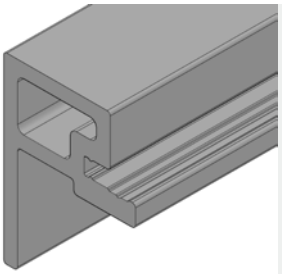

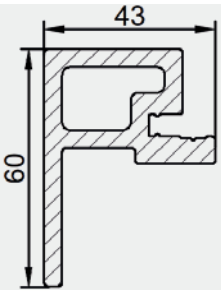


### Profile «start-finish» AC 10

| | |
|---|---|
| Size | 27,5x150x3600 mm |

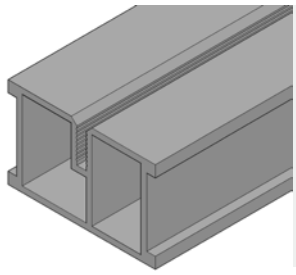

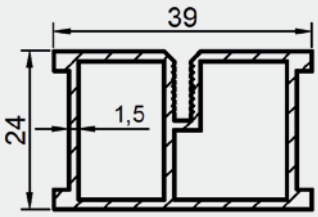


Profile
aluminum

| | |
|---|---|
| Size | 24x39x3000 mm |

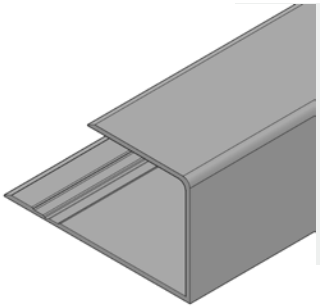

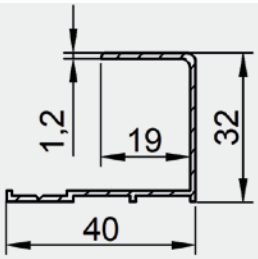


Starter
aluminum
profile

| | |
|---|---|
| Size | 32x40x3600 mm |

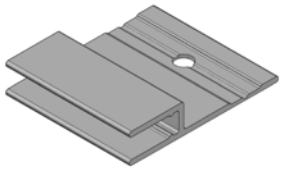

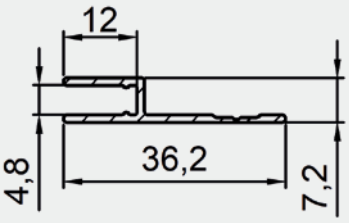


Clip
aluminum

| | |
|---|---|
| Size | 27,5x150x3600 mm |

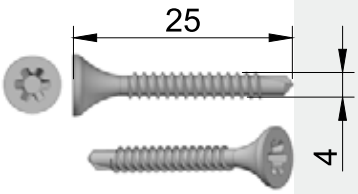


Self-tapping
screw

| | |
|---|---|
| Size | 4X325 mm |

# 3. INSTALLATION OF THE SUPPORT PROFILE FOR FIXING THE FACADE BOARD

## 3.1 METHODS OF FIXING THE SUPPORT PROFILE

To install the support profile for fixing the facade board, there are two main methods that can be used depending on the thickness of the wall.

- If the wall has no thermal insulation or its thickness is less than 100mm, it is recommended to use a dowel nail or turbo screw. This method involves fixing the support profile using either a dowel nail or turbo screw and is illustrated in Figure 1.

- On the other hand, if the wall has thermal insulation with a thickness of 100mm or more, it is recommended to use a facade bracket. This method involves fixing the support profile using a facade bracket and is illustrated in Figure 2.

If the wall fulfills the energy saving requirements as per the construction codes of the region, then there is no need for a thermal insulation layer.

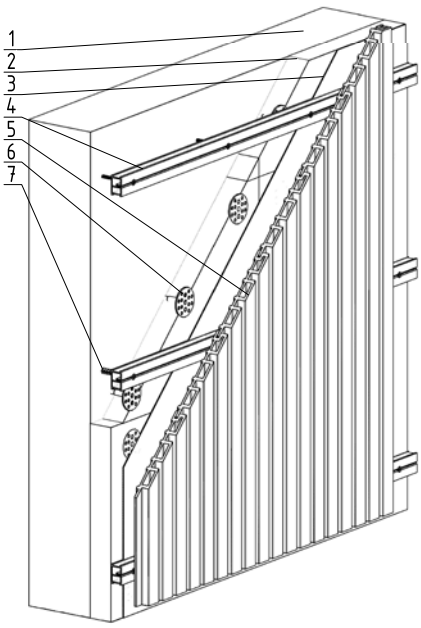


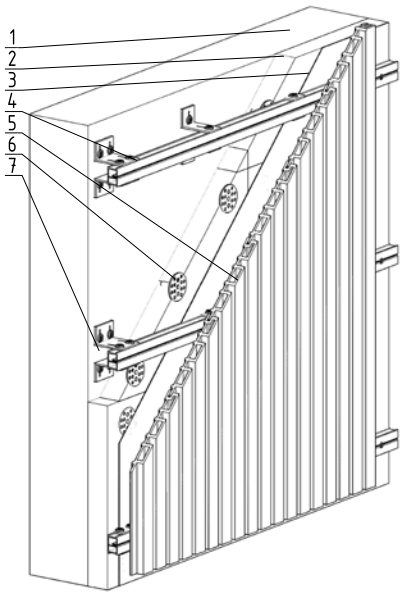


1. wall, 2. thermal insulation, 3. vapor barrier, 4. load-bearing profile, 5. facade profile, 6. facade plug, 7. nail plug or turbo screw/facade bracket.

Fig. 1 Mounting the support profile using a dowel nail or turbo screw.

Fig. 2 Mounting the support profile with the facade bracket

## 3.2 HORIZONTAL INSTALLATION

1 Install the support profile, which should be made of moisture-resistant material, on the wall. Keep a distance between its axes of no more than 500 mm. You can refer to Fig. 3 for visual aid.

2 When horizontally installing the supporting profile on the external corners of the building, it is recommended to connect it by pre-cutting the edges at an angle of 45 degrees.(see Fig. 4)

3 Make sure that the working part of the fastener, such as dowel nail, turbo screw, facade bracket anchor, etc., penetrates the "wall" by at least 50 mm. (see Fig. 4).

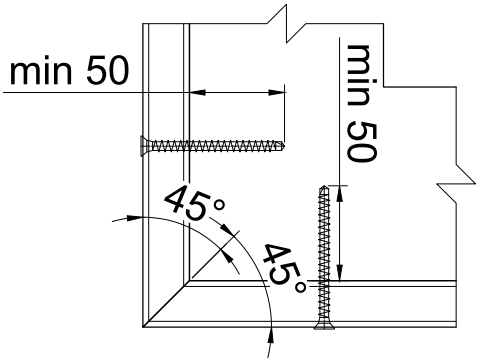


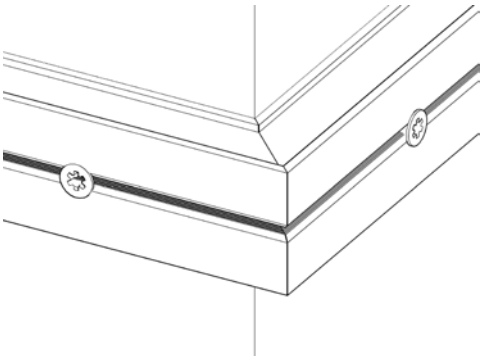

Fig. 4 Mounting the fasteners

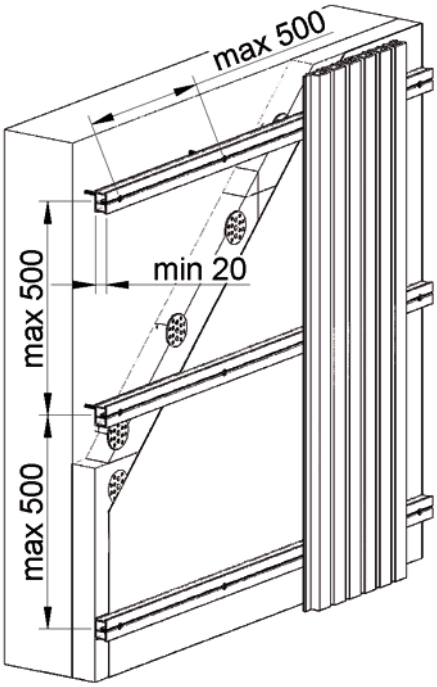


Fig. 3 Horizontal mounting

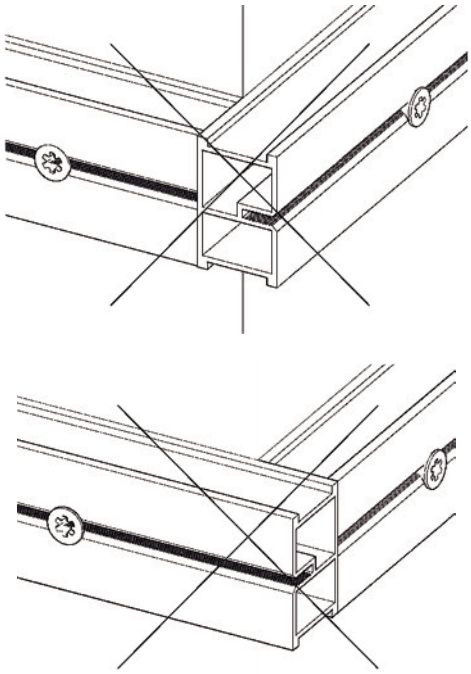

Fig. 5 Incorrect installation of the support profile

## 3.3 VERTICAL INSTALLATION

1

Mount the support profile on the wall, ensuring that the distance between its axes is no more than 500 mm. (Refer to Fig.6 for reference.)

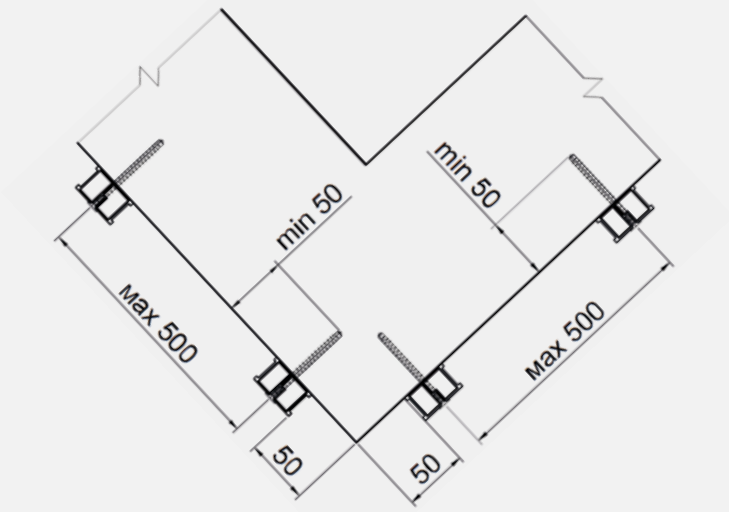


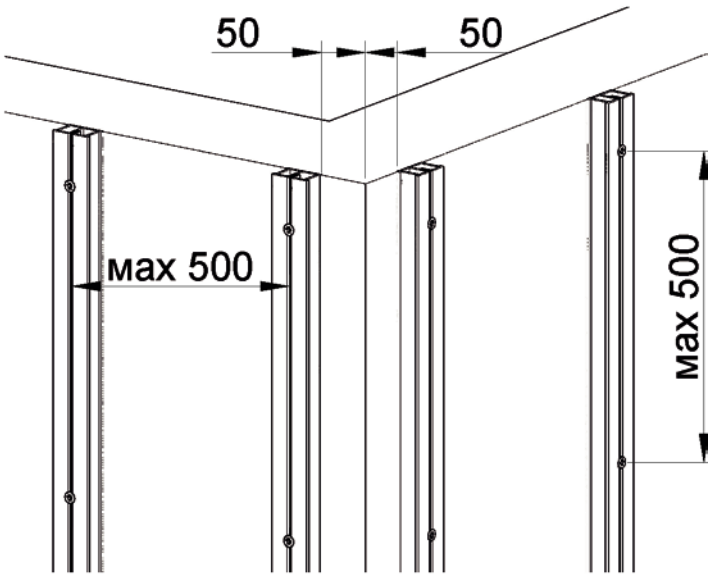


Fig. 6 Illustrates the process of mounting the support profile, which is used to fix the facade board in a horizontal position.

# 4. INSTALLATION OF THE FACADE PROFILE

## 4.1 VERTICAL INSTALLATION OF THE FACADE PROFILE

### 4.1.1 STARTING FROM THE OUTER CORNER OF THE BUILDING

1

At the attachment point, drill a hole that is 2mm larger than the diameter of the self-tapping screw in the facade profile.

It's important!
To note that drilling a hole in the support profile is not allowed.

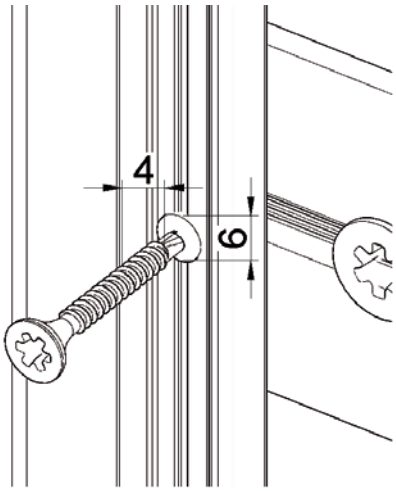


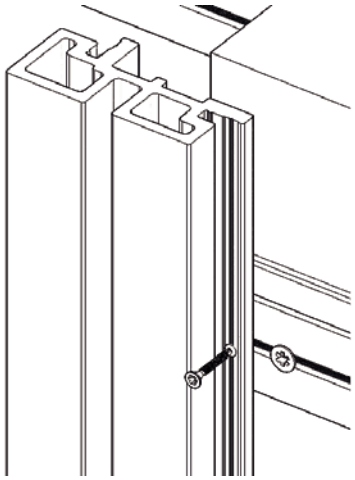

2

Use a 4×25 self-tapping screw to attach the AC 20 corner profile to the left outer corner of the building (refer to Fig. 7).

After fixing the profile, check its correctness using a level or plumb line.

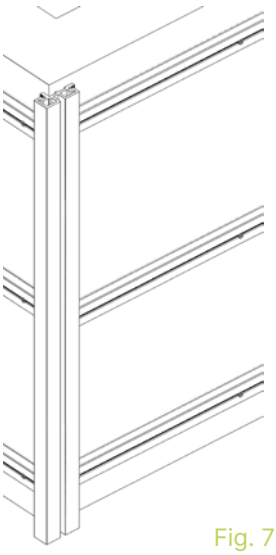

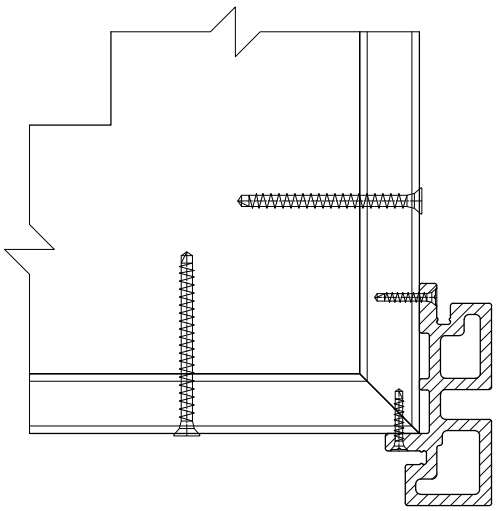

Fig. 7 Shows how to mount the AC 20 corner profile.

3

Start by inserting the Facade Profile FS 15 or FS 21 into the groove of the Corner Profile AC 20 and secure it with a clip. Install all the following profiles in the same way.

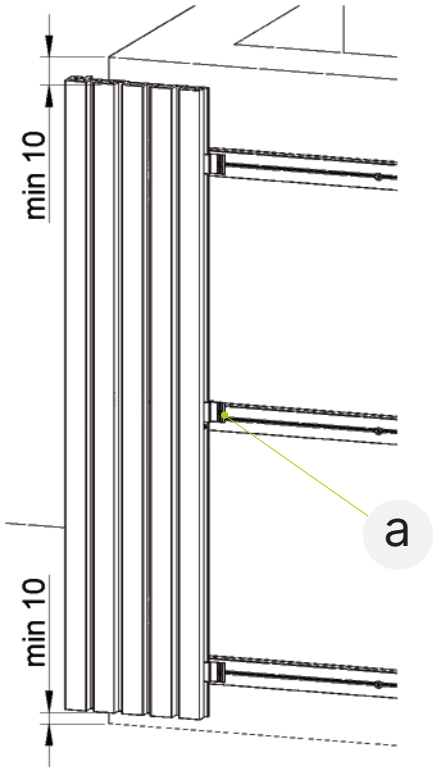


Fig. 8.0 Fixing the facade profile FS 15

4

To ensure proper ventilation and compensate for linear expansion, maintain a gap of at least 10mm between the bottom and top of the facade, as well as between the bottom and top of each profile and the building structures. See Fig. 8.0 for reference.

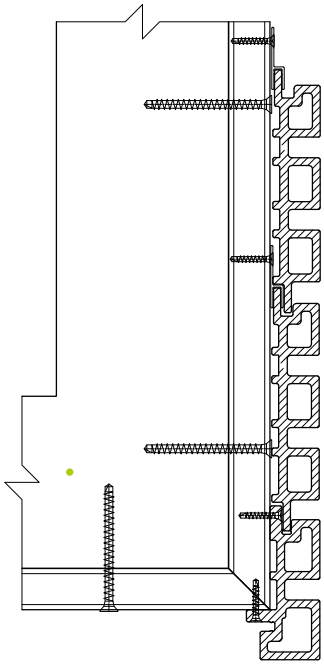

Fig. 8.1 Fixing the facade profile FS 15

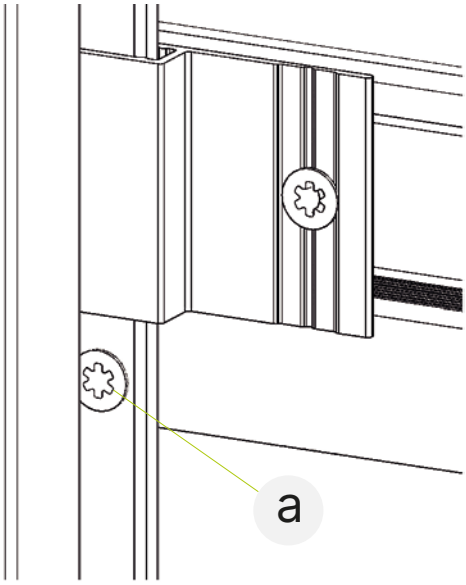


5

To prevent the profiles from sagging and to add extra support, insert a self-tapping screw (a) at the center of each profile.

Before doing this, make sure to drill a hole in the façade profile that is 2mm larger than the screw diameter. For a visual reference, please see Fig. 8.2.

Fig. 8.2 Fixing the facade profile with a self-tapping screw

6

Completing the installation of the facade at the corner of the building:

- Step 4: Attach the AC 20 profile to the corner of the building using one of the possible methods A or B (see Fig. 9).
- Step 5: Cut the FS 15 profile to the width required to complete the installation of the section.

Important!
You only need to cut from edge A.
The width of the cut profile should not be less than 70 mm so that the cut profile has at least one area for attaching a self-tapping screw.

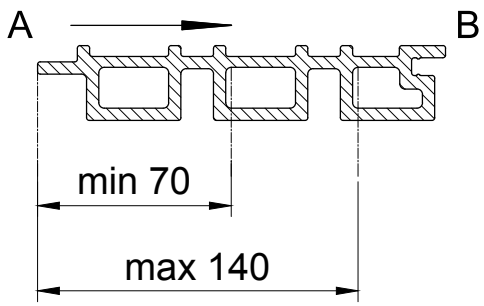


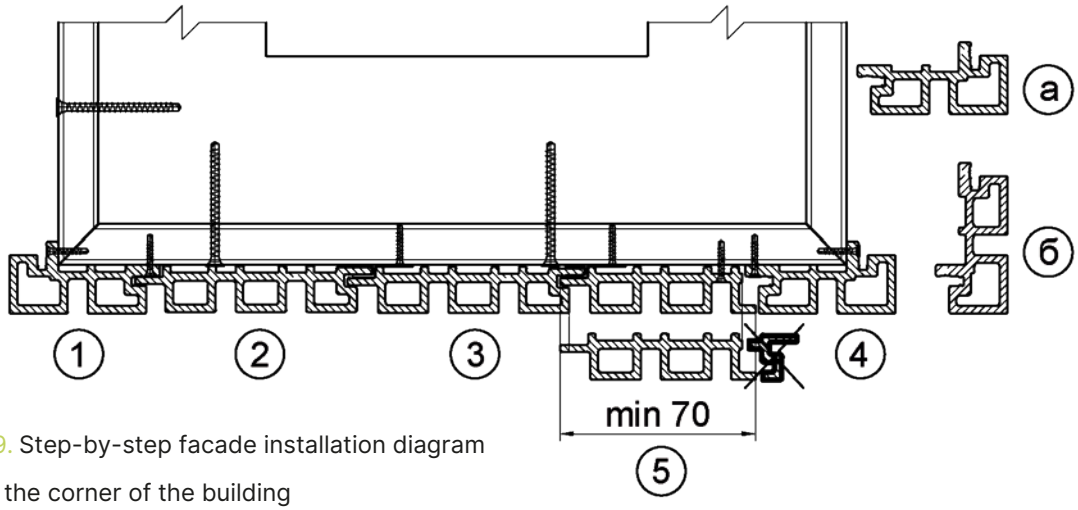


Fig. 9. Step-by-step facade installation diagram from the corner of the building

When installing the facade profile at step (5), in order to align the entire facade in one plane, fasten the additional clip (c) with the back side to the supporting profile, secure the profile with self-tapping screws (see Fig. 9).

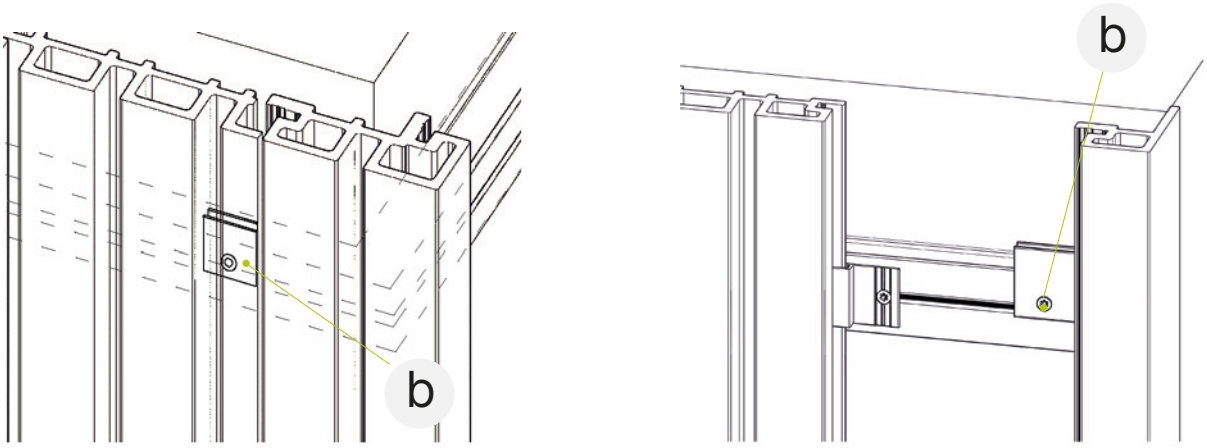


Fig. 9.1 Fixing the additional clip

## 4.1.2 FROM THE INNER CORNER OF THE BUILDING

1

Installation of the profile in the inner corner of the building is carried out at the last stage of the facade section installation.

To begin, cut the edge facade profiles as described in point 5 on page 11.
The arrows in Fig. 10 indicate the direction of installation.

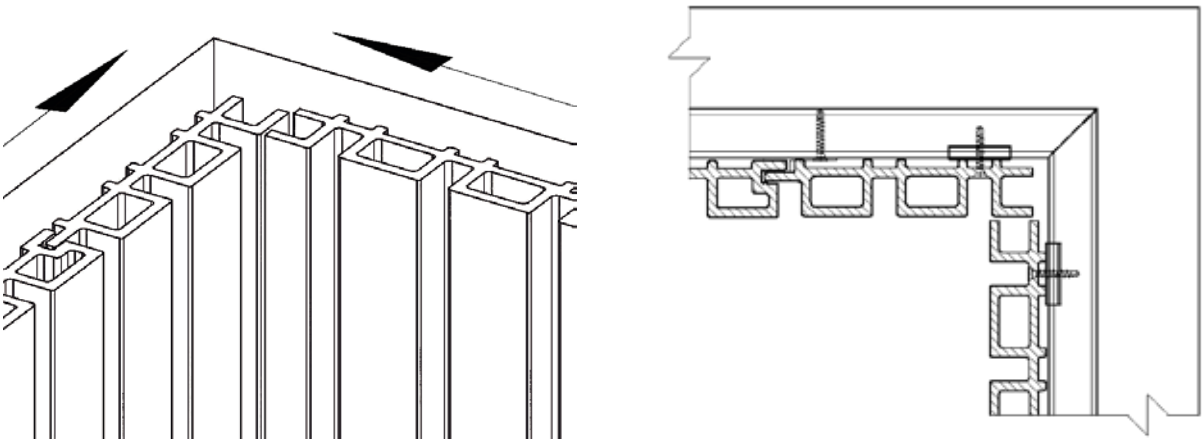

Fig. 10 Mounting the facade on the inner corner of the building

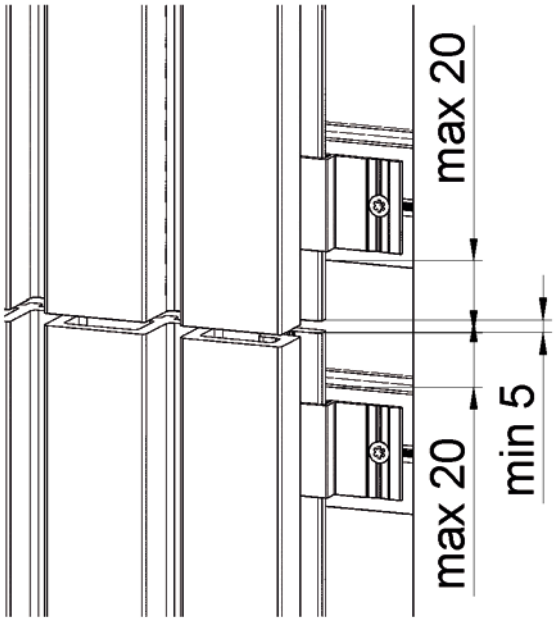


At the junction point of the two ends of the facade profile, two support profiles should be installed.

2

Each end of the façade profile must be attached to a separate support profile using a separate clip (see Fig. 11).

Fig. 11 Fixing the profile ends at the junction point

## 4.1.3 IN STRAIGHT SECTIONS OF THE BUILDING

When installing the facade profile in straight sections of the building, it is recommended to start and finish the installation with the starting profile A10. (see Fig. 12).

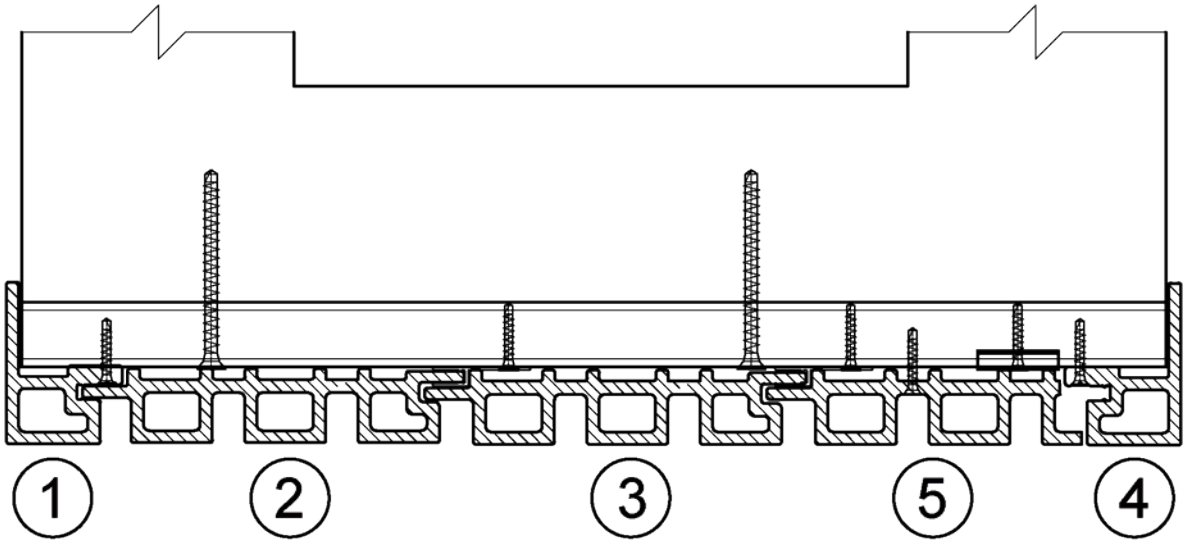


Fig. 12 Installing the facade in straight sections of the building

During step 5 of the installation process, it is necessary to attach an additional clip to the support profile. This will ensure that the facade profile is securely installed.( Fig. 9.1)

## 4.1.4 MOUNTING THE PROFILE ON THE DOOR OPENING JAMBS

It is recommended to start the installation of the facade board from the window and door jambs.

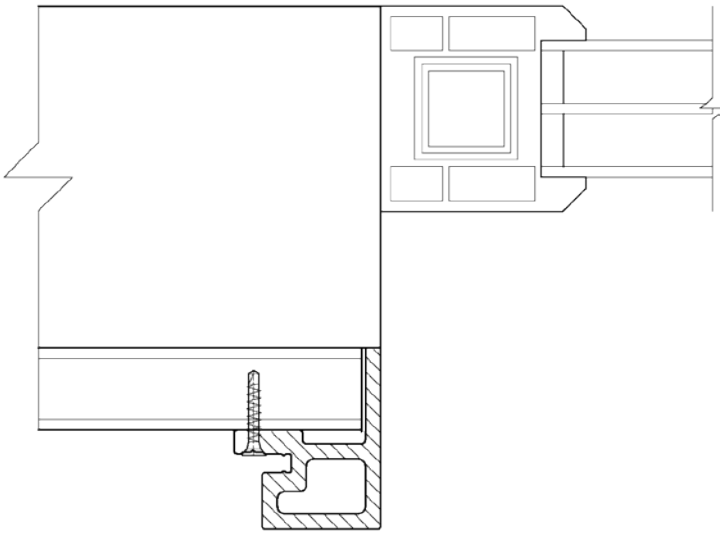

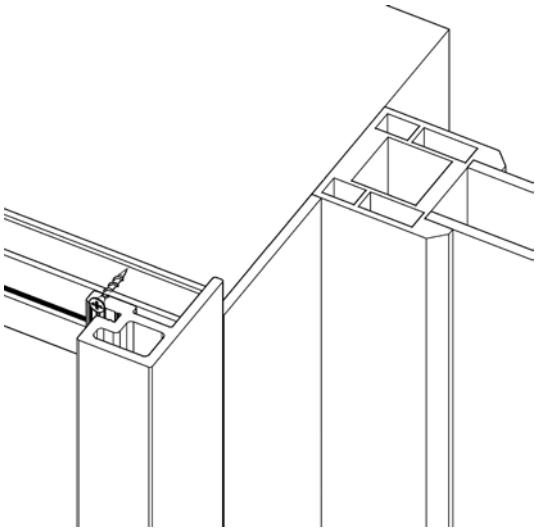

Fig. 13.1 Provides a top view of how to mount the facade on the door slope opening.

1

To fix the AC 10 starter profile to the support profile, you need to first drill holes with a diameter 2 mm larger than that of the self-tapping screw.

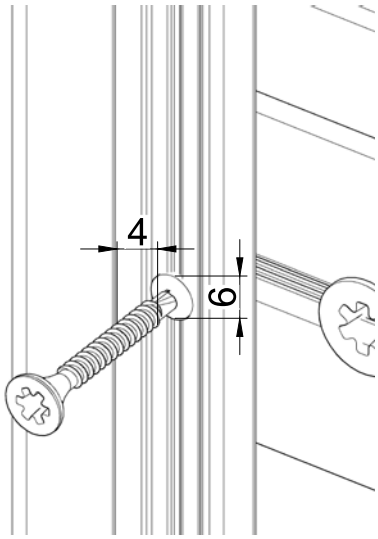


Fig. 13 Fixing the self-tapping screw

2

Proceed to fix the AC 10 starter profile using the self-tapping screw, as shown in Fig. 13.

It's important !
To note that you should not drill a hole in the support profile.

## 4.1.5 MOUNTING THE PROFILE ON THE WINDOW OPENING SLOPE

To mount the facade profile on the window opening slope, follow the steps below:

1 Fix the aluminum starter profile in place.

2 Cut the facade profile (FS 15 or FS 21) to the required size and insert it into the aluminum starter profile. Make sure the cut is inside.

3 Insert and fix the corner profiles AC 10 or AC 20 as shown in figure 14.

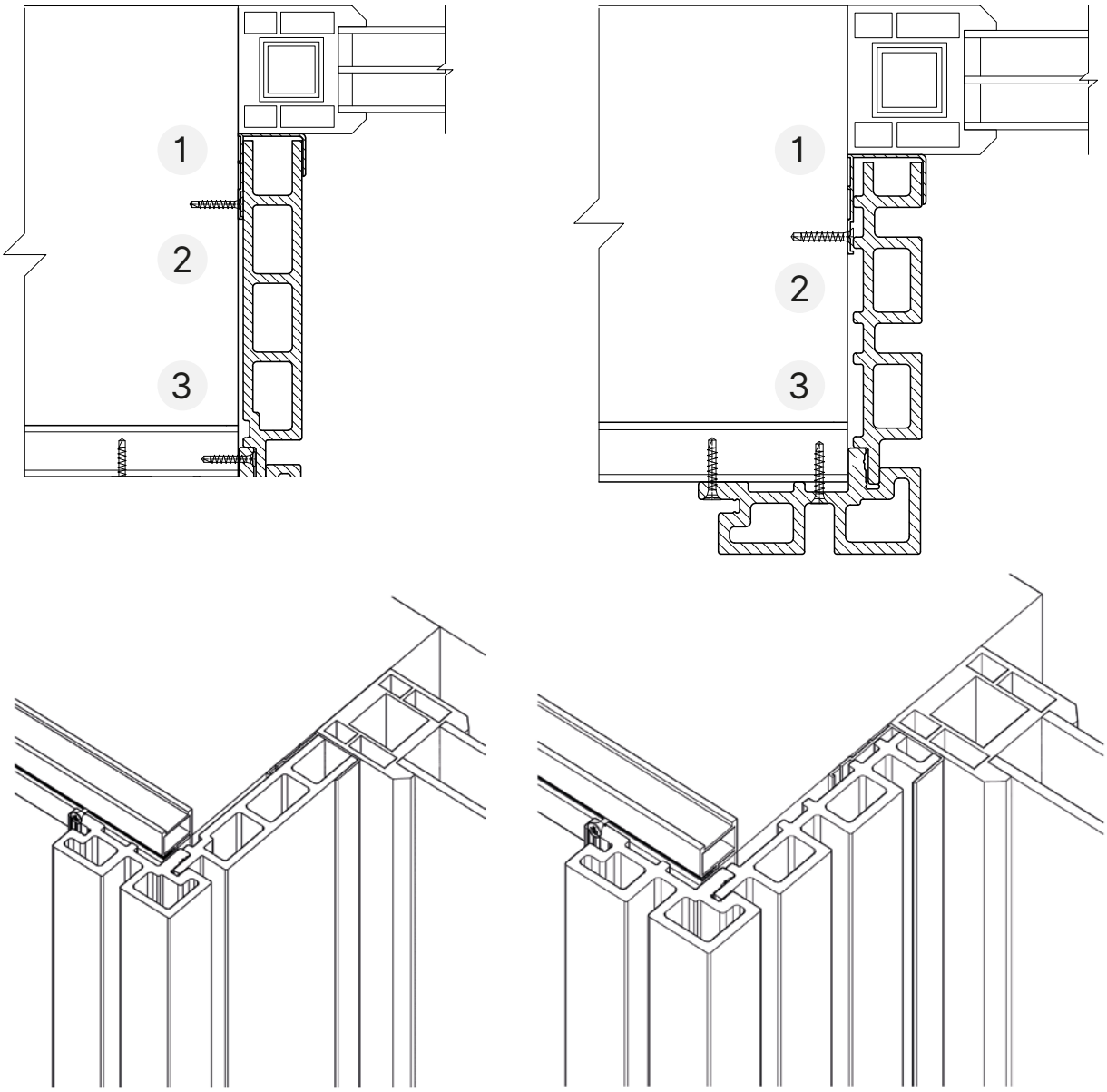


Fig. 14 Mounting FS 21, FS 15 and AC 20 profiles to the window slope.

## 4.2 HORIZONTAL INSTALLATION OF THE FACADE PROFILE

### 4.2.1 FROM THE CORNERS OF THE BUILDING

Here are the recommended steps to follow when installing the facade profile horizontally:

1 Begin by fixing the AC 10 starter profile to the support profile and make sure it's 10 mm above the ground.

2 Next, insert the FS 15 or FS 21 facade profile into the groove of the starter profile and fasten it with clips.

3 Repeat the same process for the subsequent profiles.

4 For the inside and outside corners of the building, cut the FS 15 or FS 21 profile at a 45-degree angle.

5 Ensure that there is a 2mm gap between the profiles to allow for expansion and contraction of the material during temperature changes (see Fig. 15).

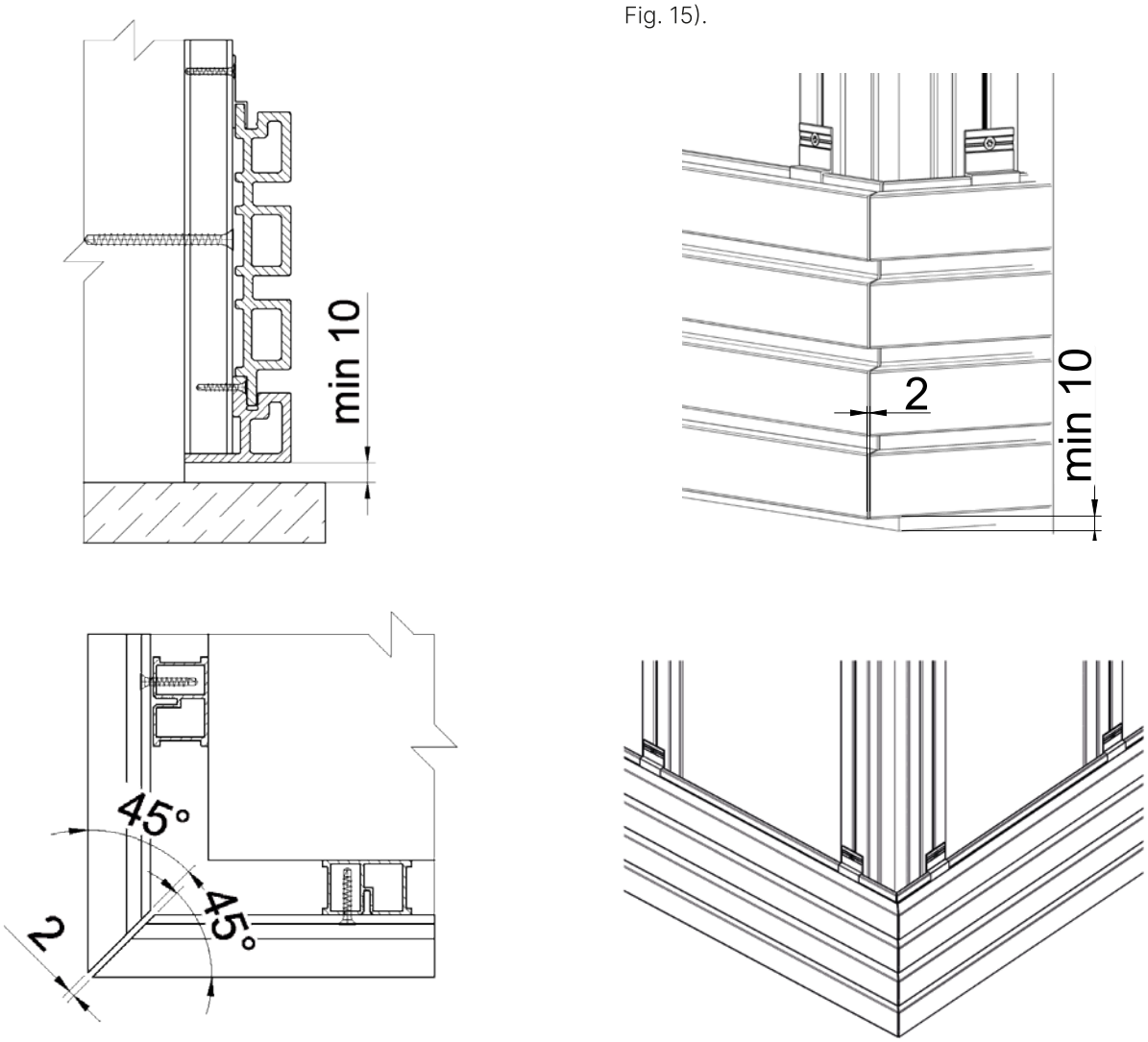


Рис. 15 Mounting the facade on the outer corner of the building

## 4.2.2 ON LEVEL AREAS OF THE BUILDING

1

2

To ensure proper installation of the facade, it is recommended to use the AC 10 starter profile at the beginning and end of straight sections of the building.

When the two ends of the FS 15 or FS 21 facade profile meet, two support profiles should be installed to ensure stability.

In order to properly mount the facade profile, it is necessary to attach each end to a separate support profile using a separate clip.

The edge of the facade profile should not extend more than 20 mm beyond the batten.

It is important to leave an end gap of at least 5 mm between the converging ends of the FS 15 or FS 21 profiles. (see Fig. 16).

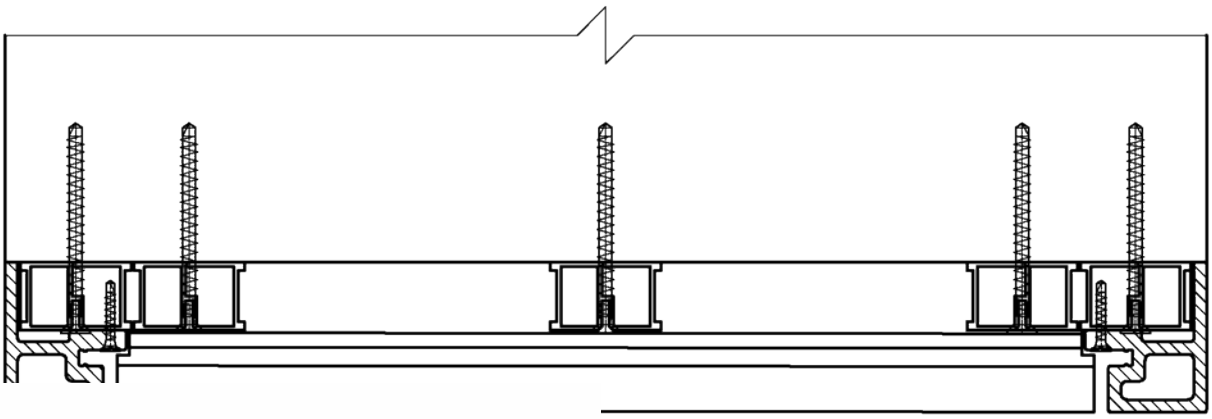

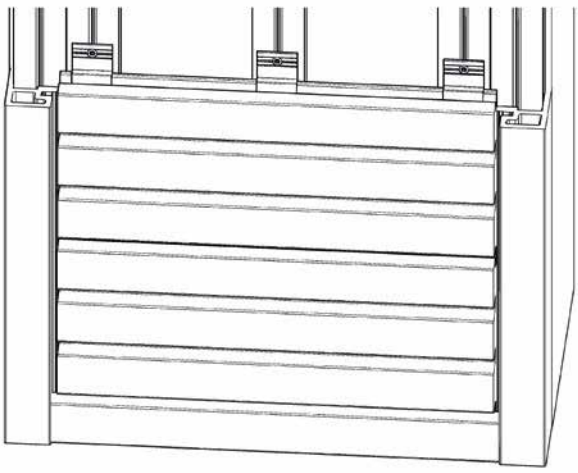

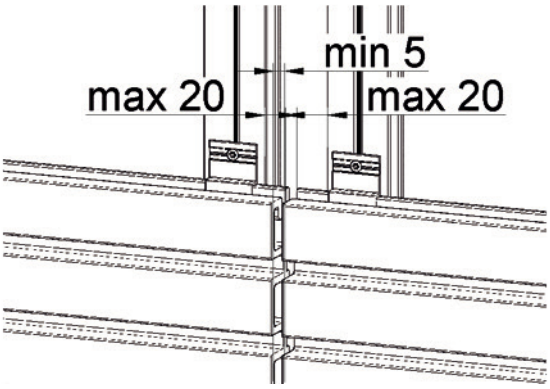


Fig. 16 Mounting the facade on straight sections of the building

## 4.2.3 ON THE WINDOW JAMBS

To install the window jambs profile, follow the same steps as for the vertical facade installation.

1

First, use dowel nails to attach the aluminum starter profile to the window jamb, ensuring that it adjoins the window frame.

2

Then, cut the FS 21 facade profile to the required size and insert it into the groove of the aluminum profile.

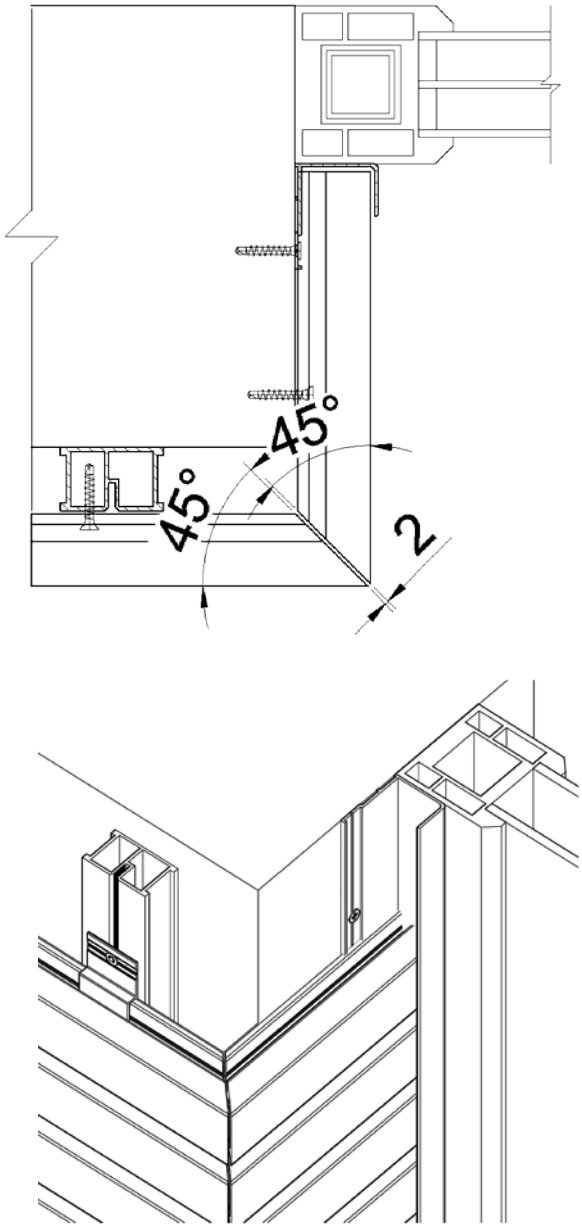


45°

For the corners of the building, cut the ends of the facade profiles at a 45-degree angle to ensure a proper joint. (see Fig. 17).

Fig. 17 Mounting the facade on the window opening slope

## 5. ROOF OVERHANGS (EAVES) LINING

It is recommended to use profile FS21. Follow these steps to install it:

1 Mount the support profile to the roof overhang. Keep a distance of up to 500 mm between the axes.

2 Fix the aluminum profile to the building wall using dowel nails.

3 Attach the facade profile to the support profile using a clip.

4 Attach the AC 10 profile to the end support profile. Ensure that it covers the facade ends and the substructure. (see Fig. 19).

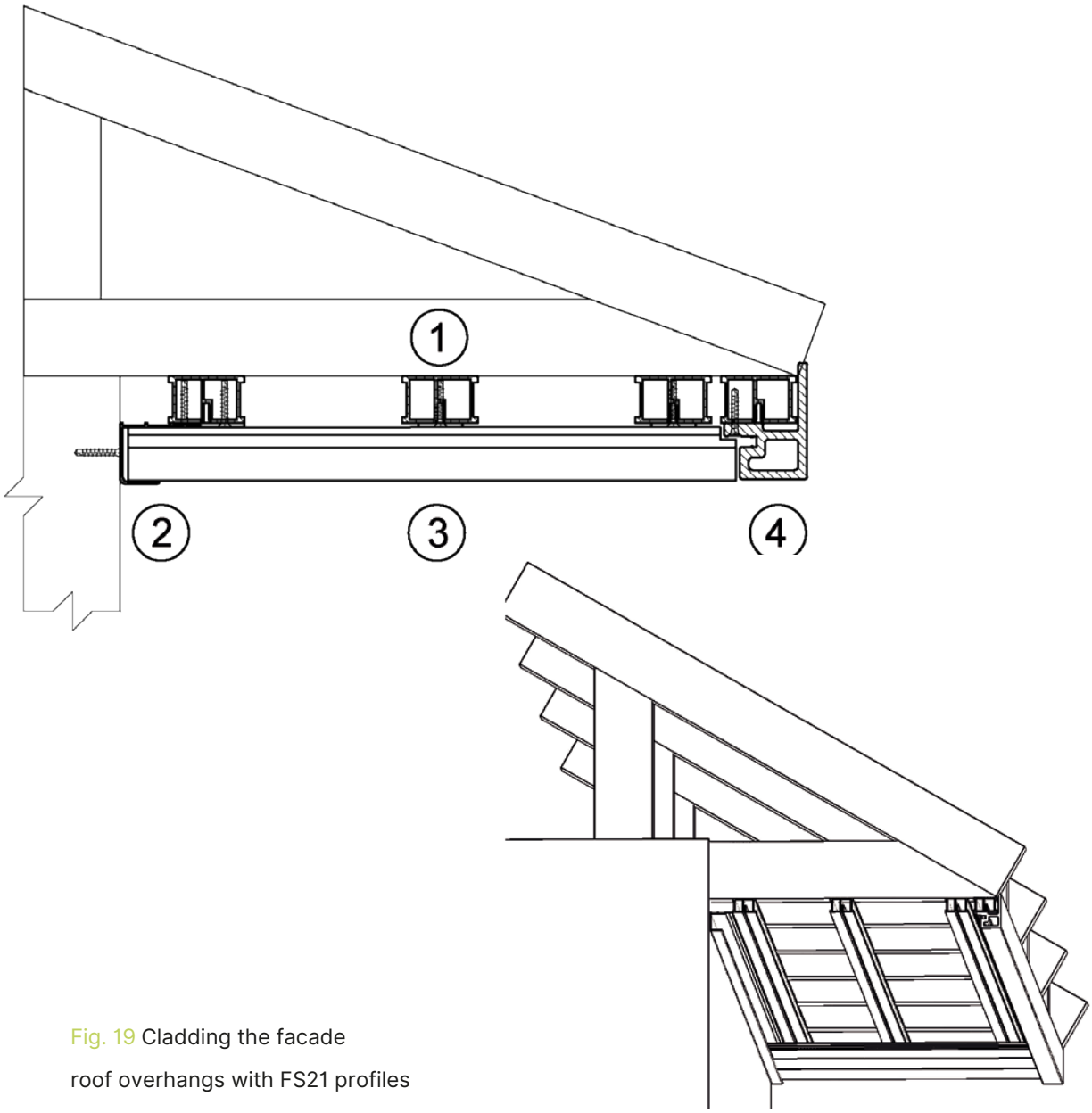


Fig. 19 Cladding the facade roof overhangs with FS21 profiles

## 6. BASIC INSTALLATION SCHEMES FOR FACADE PROFILES

Diagram Nº. 1

| Profile name | Installation step according to diagram | Notes |
|---|---|---|
| AC 10 | 9 | |
| FS 15 | 10, 8, 2 | |
| FS 15, FS 20 | 11, 12, 4, 6 | Truncated element |
| AC 20 | 1, 3, 7 | |
| Aluminum profile | 5 | |
| Clip for additional support | | |

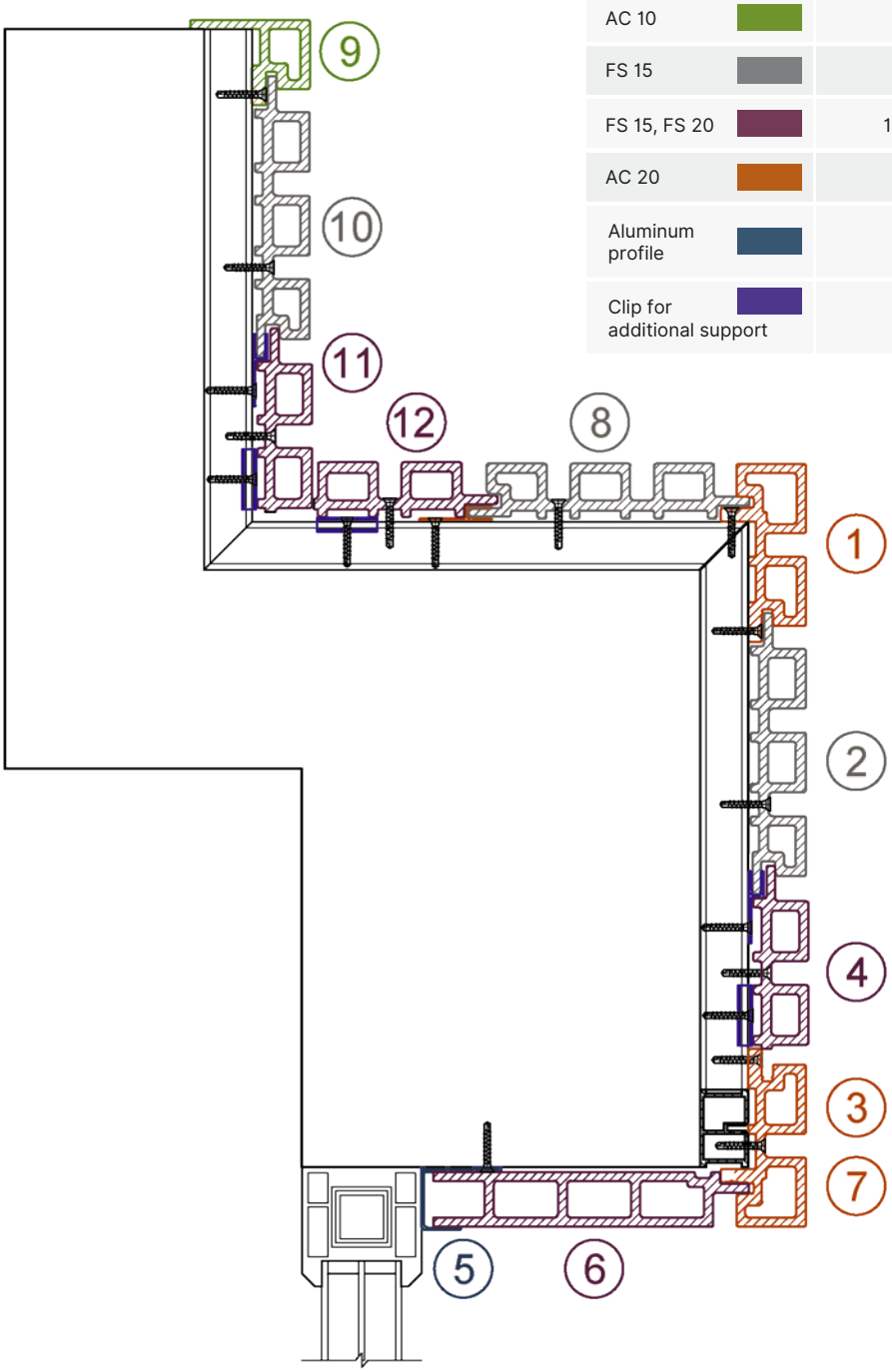


The diagram outlines 11 steps and illustrates the substructure elements used during installation.

- Step 3 involves placing the AC20 profile in the intended installation area and measuring the width of the adjacent profiles, as shown in steps 4 and 6.
- Step 7: Fix the AC20 profile with self-drilling screws.

Diagram Nº. 2

| Profile name | Installation step according to diagram | Notes |
|---|---|---|
| AC 10 | 9 | |
| FS 21 | 10, 8, 2 | |
| FS 21 | 11, 12, 4, 6 | Truncated element |
| AC 20 | 1, 3, 7 | |
| Aluminum profile | 5 | |
| Clip for additional support | | |

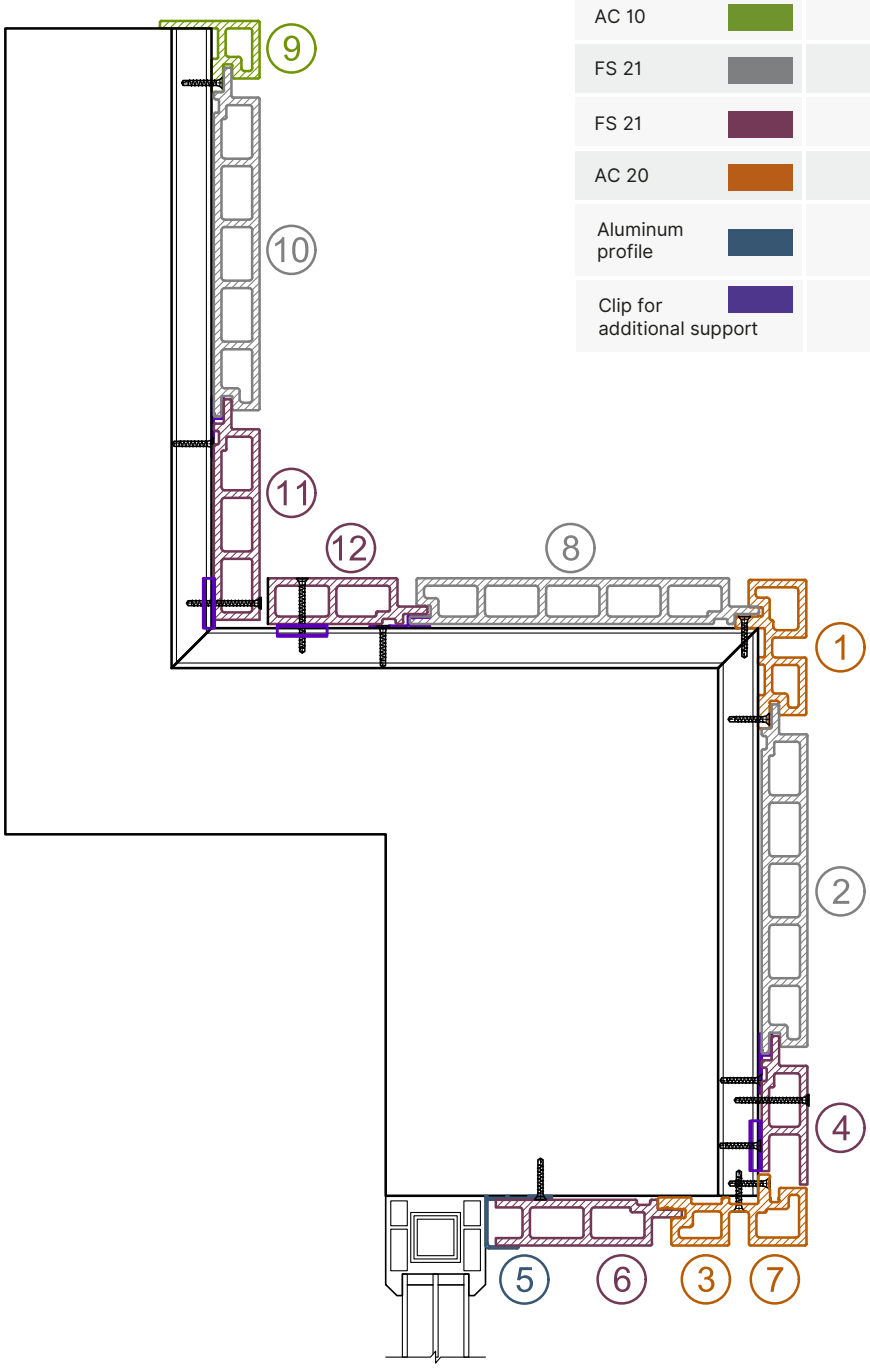


The diagram outlines 11 steps and illustrates the substructure elements used during installation.

For Step 3 and 7 see page 20